Tik-61.231 Principles of Pattern Recognition

Answers to exercise 7: 13.11.2000

1. $y = f(o) = f(\sum_{i=1}^{n} w_i x_i - \theta)$ is the actual output of the perceptron and d is the desired output.

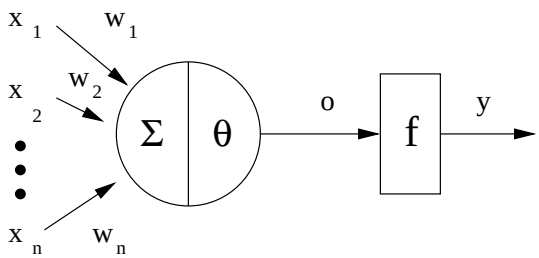

The squared error $E = (y - d)^2$ is minimized using the gradient descent method. The gradient descent method moves the parameter vector $\underline{w}^T = (w_1, w_2, \ldots, w_n, \theta)$ to the opposite direction of the gradient $\nabla \underline{w} E = (\frac{\partial E}{\partial w_1}, \ldots, \frac{\partial E}{\partial \theta})$:

$$w_i^{new} = w_i^{old} + \Delta w = w_i^{old} - \eta \frac{\partial E}{\partial w_i}$$

According to the chain rule $\frac{\partial E}{\partial w_i} = \frac{\partial E}{\partial y} \frac{\partial y}{\partial o} \frac{\partial o}{\partial w_i}$.

Now we have $\frac{\partial E}{\partial y} = 2(y - d)$, $\frac{\partial y}{\partial o} = 1 - y^2$ (since $\frac{d \tanh(x)}{dx} = 1 - \tanh(x)^2$) and $\frac{\partial o}{\partial w_i} = x_i$.

Thus we can write $\Delta w_i = f(y, d) x_i$, where $f(y, d) = -\eta(y - d)(1 - y^2)$.

2. With a hidden layer and an output layer

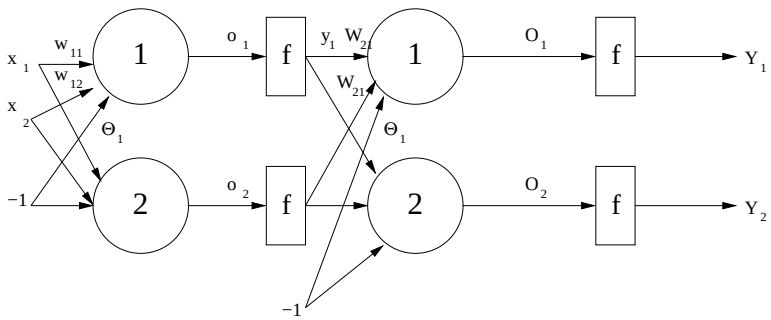

$$o_l = \sum_{k=1}^{2} w_{kl} x_k - \theta_l, \;\; y_l = f(o_l) \text{ (hidden layer)}$$

$$O_l = \sum_{i=1}^{2} W_{ij} y_i - \Theta_l, \;\; Y_i = f(O_j) \text{ (output layer)}$$

The back-propagation algorithm updates the parameters by minimizing the squared error $E = ||\underline{Y} - \underline{D}||^2$ using the gradient descent method. $\underline{Y}$ is the output of the network and $\underline{D}$ is the desired output.

$$E = ||\underline{Y} - \underline{D}||^2 = \sum_{j=1}^{2} (Y_j - D_j)^2 = \sum_{j=1}^{2} (f(O_j) - D_j)^2 = \sum_{j=1}^{2} (f(\sum_{i=1}^{2} W_{ij} y_i - \Theta_j) - D_j)^2$$

Now we have the logsig function $f(x) = \frac{1}{1+e^{-x}}$, so $\frac{dlogsig(x)}{dx} = logsig(x)(1 - logsig(x))$.
For the output neurons, with the chain rule,

$$\frac{\partial E}{\partial W_{ij}} = \frac{\partial E}{\partial Y_j}\frac{\partial Y_j}{\partial O_j}\frac{\partial O_j}{\partial W_{ij}}$$

Here $\frac{\partial E}{\partial Y_j} = 2(Y_j - D_j)$, $\frac{\partial Y_j}{\partial O_j} = Y_j(1 - Y_j)$ (derivative of logsig) and $\frac{\partial O_j}{\partial W_{ij}} = y_i$. Also $\frac{\partial O_j}{\partial \Theta_j} = -1$. Now let $\delta_j^{(2)} = (Y_j - D_j)Y_j(1 - Y_j)$.
Thus

$$\begin{aligned}\frac{\partial E}{\partial W_{ij}} &= 2(Y_j - D_j)Y_j(1 - Y_j)y_i = 2\delta_j^{(2)} y_i \\ \frac{\partial E}{\partial \Theta_j} &= -2(Y_j - D_j)Y_j(1 - Y_j) = -2\delta_j^{(2)}\end{aligned}$$

And the update rules become, with the learning parameter η,

$$\begin{aligned}W_{ij}^{(t+1)} &= W_{ij}^{(t)} - \eta\delta_j^{(2)}(t)y_i(t) \\ \Theta_j^{(t+1)} &= \Theta_j^{(t)} + \eta\delta_j^{(2)}(t)\end{aligned}$$

And for the hidden layer neurons, again using the chain rule,

$$\begin{aligned}\frac{\partial E}{\partial w_{kl}} &= \sum_{j=1}^{2} \frac{\partial E}{\partial Y_j}\frac{\partial Y_j}{\partial O_j}\frac{\partial O_j}{\partial y_l}\frac{\partial y_l}{\partial o_l}\frac{\partial o_l}{\partial w_{kl}} \\ &= \sum_{j=1}^{2} 2(Y_j - D_j)Y_j(1 - Y_j)W_{ij}y_l(1 - y_l)x_k \\ &= 2y_l(1 - y_l)x_k \sum_{j=1}^{2} 2(Y_j - D_j)Y_j(1 - Y_j)W_{ij} \\ &= 2y_l(1 - y_l)x_k \sum_{j=1}^{2} \delta_j^{(2)} W_{ij}\end{aligned}$$

Now let $\delta_l^{(1)} = y_l(1 - y_l)\sum_{j=1}^{2} \delta_j^{(2)} W_{ij}$. Now

$$\begin{cases}\frac{\partial E}{\partial w_{kl}} = 2\delta_l^{(1)} x_k \\ \frac{\partial E}{\partial \theta_l} = -2\delta_l^{(1)}\end{cases} \Rightarrow \begin{cases} w_{kl}^{(t+1)} = w_{kl}^{(t)} - \eta\delta_j^{(1)}(t)x_k(t) \\ \theta_l^{(t+1)} = \theta_l^{(t)} + \eta\delta_j^{(1)}(t)\end{cases}$$

3. The cross-entropy function to be optimized is $J = -\sum_{i=1}^{N}\sum_{k=1}^{k_L} y_k(i)\ln(\frac{\hat{y}^k(i)}{y_k(i)})$ and the activation function is the sigmoid $f(x) = \frac{1}{1+\exp(-ax)}$. The gradient $\delta_k^L(i)$ can be calculated from the energy function, and since

$$J = \sum_{k=1}^{k'} \mathcal{E}(i) \Rightarrow \mathcal{E}(i) = -y_k(i)\ln(\frac{\hat{y}^k(i)}{y_k(i)})$$

Thus

$$\begin{aligned}\delta_k^L(i) &= \frac{\partial \mathcal{E}(i)}{\partial v_k^L(i)} \\ &= -\frac{\partial y_k(i)\ln(\hat{y}_k(i)/y_k(i))}{\partial v_k^L(i)} \\ &= -y_k(i)\left(\frac{\partial}{\partial v_k^L(i)}\ln\hat{y}_k(i) - \frac{\partial}{\partial v_k^L(i)}y_k(i)\right) \\ &= -y_k(i)\frac{\partial}{\partial v_k^L(i)}\ln\hat{y}_k(i) \\ &= -y_k(i)\frac{\partial}{\partial v_k^L(i)}\ln(\frac{1}{1+e^{-av_k^L(i)}}) \\ &= -y_k(i)\frac{\partial}{\partial v_k^L(i)}\{\ln 1 - \ln(1 + e^{-av_k^L(i)})\} \\ &= -y_k(i)\frac{-ae^{-av_k^L(i)}}{1+e^{-av_k^L(i)}} \\ &= -ay_k(i)\left(-1 + \frac{1}{1+e^{-av_k^L(i)}}\right) \\ &= ay_k(i)(1 - \hat{y}_k(i))\end{aligned}$$

4. The cross-entropy function to be optimized is $J = -\sum_{i=1}^{N}\sum_{k=1}^{k_L} y_k(i)\ln(\frac{\hat{y}^k(i)}{y_k(i)})$. Using the softmax activation function $\hat{y}_k(i) = \frac{e^{v_k^L}}{\sum_{k'=1}^{L} e^{v_{k'}^L}}$

$$
\begin{aligned}
\delta_k^L(i) =& \frac{\partial \mathcal{E}(i)}{\partial v_k^L(i)} \\
=& -\frac{\partial y_k(i)\ln(\hat{y}^k(i)/y_k(i))}{\partial v_k^L(i)} \\
=& -y_k(i)\left(\frac{\partial}{\partial v_k^L(i)}\ln\hat{y}^k(i) - \frac{\partial}{\partial v_k^L(i)} y_k(i)\right) \\
=& -y_k(i)\frac{\partial}{\partial v_k^L(i)}\ln\hat{y}^k(i) \\
=& -y_k(i)\frac{1}{\hat{y}^k(i)}\frac{\partial \hat{y}^k(i)}{\partial e^{v_k^L}}\frac{\partial e^{v_k^L}}{\partial v_k^L(i)} \\
=& -y_k(i)\frac{1}{\hat{y}^k(i)}\left(\frac{1}{\sum_{k'} e^{v_{k'}^L}} + e^{v_k^L}(-1)(\sum_{k'} e^{v_{k'}^L})^{-2}\right) e^{v_k^L} \\
=& -y_k(i)\frac{1}{\hat{y}^k(i)}(\hat{y}^k(i) - \hat{y}^k(i)^2) \\
=& -y_k(i)(1 - \hat{y}^k(i)) \\
=& \hat{y}^k(i)y_k(i) - y_k(i)
\end{aligned}
$$

Note: the result $\delta_j^L(u) = \hat{y}_j(i) - y_j(i)$ shown in the books assignment *(Theodorodis 4.7, p. 130)* and also in the original exercise paper would appear to be incorrect and is probably just an error in the book.

5. The behavior of the function can easily be seen, as

$$\mu = \mu_o \frac{1}{1 + \frac{t}{t_0}} = \mu_o \frac{t_0}{t_0 + t}$$

It is rather obvious, that when $t << t_0$ $\mu \approx \frac{t_0}{t_0}\mu_0 = \mu_0$. For example, if $t_0 = 400$ and $t = 1$, $\mu \approx 0.998\mu_0$. Also, when $t >> t_0$, $\mu \approx \frac{t_0}{t}\mu_0$ which is inversely proportional to t.

The behavior in both situations has been illustrated in the figures below.

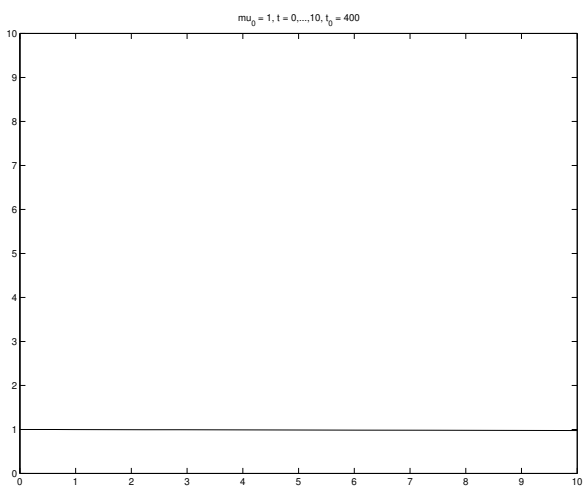

$t << t_0$

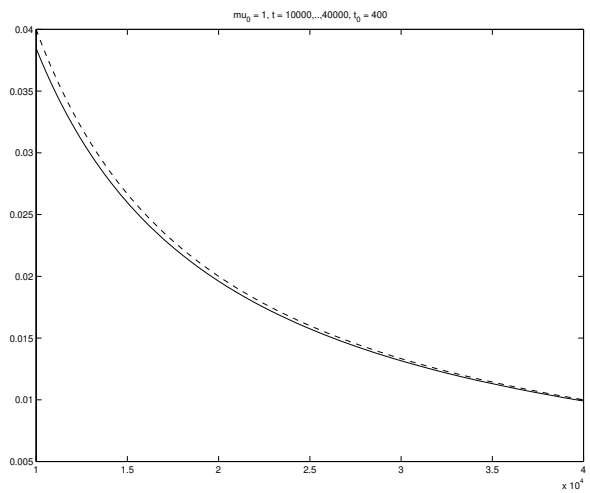

$t >> t_0$